REV.	DESCRIPTION	DATE
A	New Drawing	2023/11/27

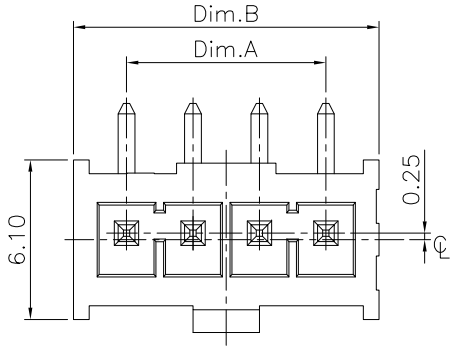

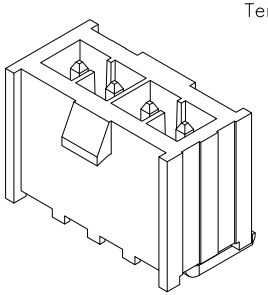

Wafer:WRFB-DSXXXXXNNLC-F30
Wafer:WRFB-RSXXXXXNNLC-F30
Housing:WRFB-H254XXXWAA-F30
Terminal:CU-PXX-F28

Specifications:
Current Rating: 3.0A AC,DC
Voltage Rating: 675V AC,DC
Contact Resisitance: 20m ohm.Max
Insulation Resisitance: 1000M ohm.Min
Withstanding Voltage: 1000V AC/Minute
Operating Temperature Range: −55°C~+125°C

Material:
Insulator: LCP(UL94V-0)
Insulator Color: Natural
Contact: Brass
Plated: Gold/Matte Tin Plated

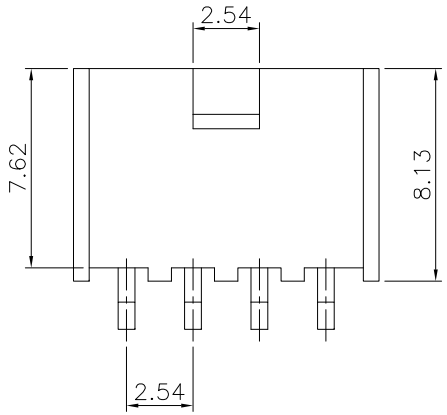

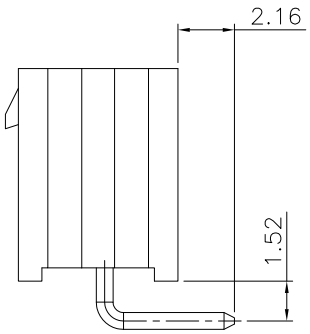

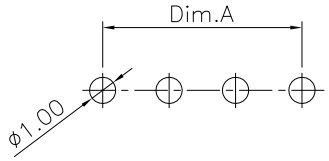

P.C.B Layout

Dimension Information:

Pin.No	Dim.A	Dim.B	Pin.No	Dim.A	Dim.B
2	2.54	6.60	14	33.02	37.08
3	5.08	9.14	15	35.56	39.62
4	7.62	11.68	16	38.10	42.16
5	10.16	14.22	17	40.64	44.70
6	12.70	16.76	18	43.18	47.24
7	15.24	19.30	19	45.72	49.78
8	17.78	21.84	20	48.26	52.32
9	20.32	24.38	21	50.80	54.86
10	22.86	26.92	22	53.34	57.40
11	25.40	29.46	23	55.88	59.94
12	27.94	32.00	24	58.42	62.48
13	30.48	34.54	25	60.96	65.02

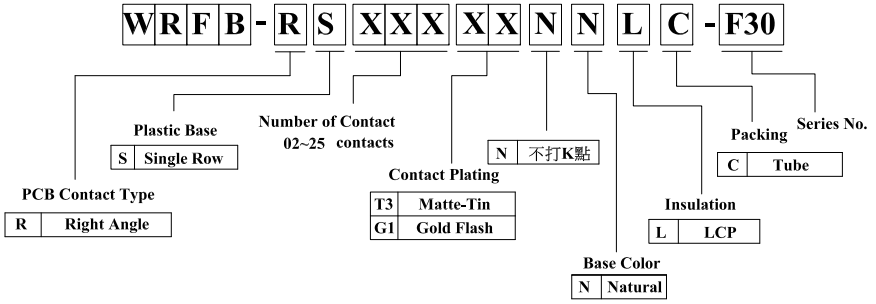

RoHS compliant

竣豪電子股份有限公司 **Superior Tech Co., Ltd.**			General Tolerance		TITLE	WAFER PH2.54 ,R/A DIP,LCP料 DC=2.16mm
			X. ± 0.5		DRAWN Jacky	DATE 11-27-23' / NO. T230
			.X ± 0.3		CHECK Tom	DATE 11-27-23' / PART NO. WRFB-RSXXXXXNNLC-F30
			.XX ± 0.2		APPROVED Tom	DATE 11-27-23' / CUSTOMER NO.
REV. A	UNIT mm	SCALE 1:1	.XXX ± 0.1			
			角度	± 5°		