REV.	DESCRIPTION	DATE
A	New Drawing	2023/11/27

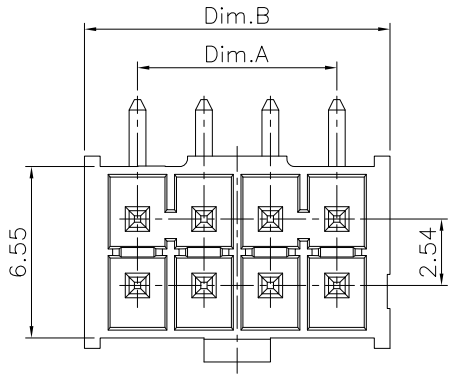

Wafer:WRFB-DDXXXXXNXLC-F28
Wafer:WRFB-RDXXXXXNXLC-F28
Housing:WRFB-H254XXXXAA-F28
Terminal:CU-PXX-F28

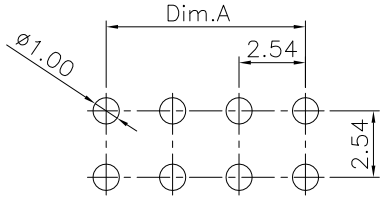

P.C.B Layout

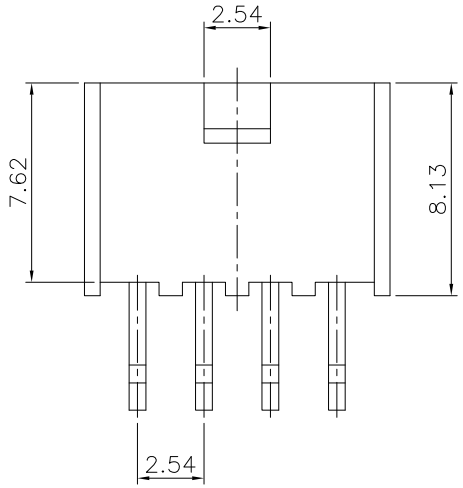

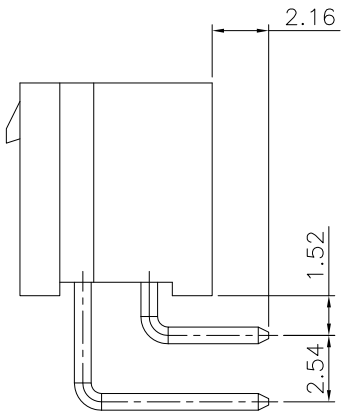

Specifications:
Current Rating: 3.0A AC,DC
Voltage Rating: 675V AC,DC
Contact Resisitance: 20m ohm.Max
Insulation Resisitance: 1000M ohm.Min
Withstanding Voltage: 1000V AC/Minute
Operating Temperature Range: -55°C~+125°C

Material:
Insulator: LCP(UL94V-0)
Insulator Color: Natural Or Black
Contact: Brass
Plated: Gold/Matte Tin Plated/Selective Gold Plated

Dimension Information:

Pin.No	Dim.A	Dim.B	Pin.No	Dim.A	Dim.B
4	2.54	6.60	28	33.02	37.08
6	5.08	9.14	30	35.56	39.62
8	7.62	11.68	32	38.10	42.16
10	10.16	14.22	34	40.64	44.70
12	12.70	16.76	36	43.18	47.24
14	15.24	19.30	38	45.72	49.78
16	17.78	21.84	40	48.26	52.32
18	20.32	24.38	42	50.80	54.86
20	22.86	26.92	44	53.34	57.40
22	25.40	29.46	46	55.88	59.94
24	27.94	32.00	48	58.42	62.48
26	30.48	34.54	50	60.96	65.02

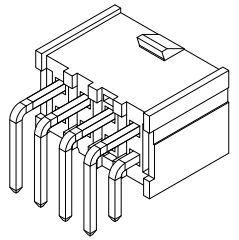

WRFB-RDXXXXXNXLC-F28

PCB Contact Type: R Right Angle
Plastic Base: D Dual Row
Number of Contact 04~50 contacts
Contact Plating: T3 Matte-Tin; G1 Gold Flash; SA Selective G/F-Matte Tin
N 不打K點
Base Color: N Natural; B Black
Insulation: L LCP
Packing: C Tube
Series No.

RoHS compliant

竣豪電子股份有限公司 Superior Tech Co., Ltd.	General Tolerance	TITLE	WAFER PH2.54 ,R/A DIP,LCP料 DC=2.16mm	
	X. ± 0.5	DRAWN Jacky	DATE 11-27-23'	NO. T230
	.X ± 0.3			
	.XX ± 0.2	CHECK Tom	DATE 11-27-23'	PART NO. WRFB-RDXXXXXNXLC-F28
REV. A / UNIT mm / SCALE 1:1	.XXX ± 0.1	APPROVED Tom	DATE 11-27-23'	CUSTOMER NO.
	角度 ± 5°			

(Q2-R03-01A) ST-R05-07