REV.	DESCRIPTION	DATE
A	New Drawing	2022/10/27

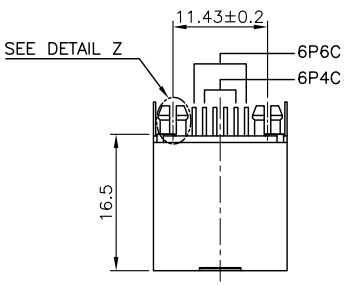

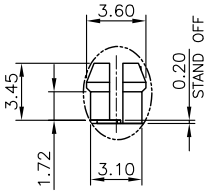

DETAIL Z
SCALE 2:1

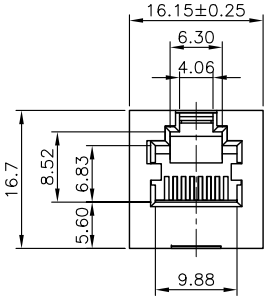

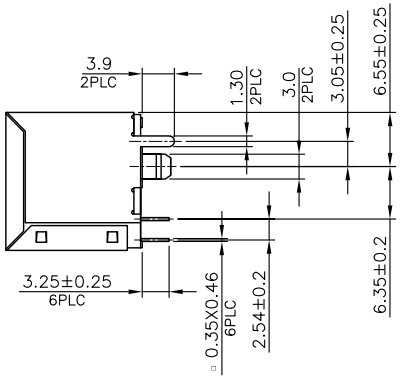

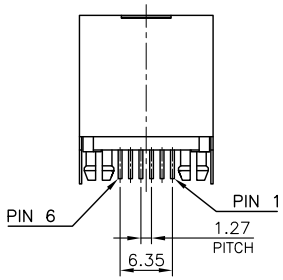

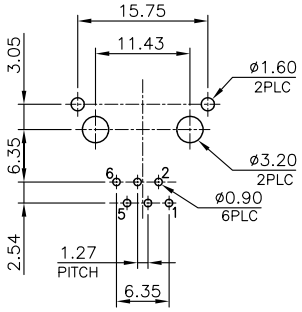

RECOMMENDED PCB LAYOUT
PCB THICKNESS: 1.6mm
TOLERANCE: ±0.05mm (TOP VIEW)

NOTE:

CAVITY CONFIRMS TO FCC RULES AND REGULATIONS PART 68, SUBPART F.

1. MATERIAL:
   1.1 HOUSING: PBT, WITH GLASS FIBER, UL94V-0, STANDARD COLOR-BLACK.
   1.2 CONTACTS: PHOSPHOR BRONZE.
   1.3 SHELL: BRASS.

2. FINISH:
   2.1 CONTACTS: GOLD PLATED ON CONTACT AREA, GOLD FLASH ON SOLDER TAIL, 1.27μm [50μ″] MIN. NICKEL UNDERPLATED OVERALL.
   2.2 SHELL: 0.508μm [20μ″] MIN. NICKEL PLATED.

3. Operating Temperature: -40°C to 85°C

RJAB-6P6CSF5PBB-A87

- Number of Positions: 6P — 6Positions
- Number of Contact: 6C — 6Contacts
- Port: S — Single
- Contact Plating: F5 — Selective G/F-Gold 6u"
- Base: P — PBT
- Color: B — Black
- B — Tray
- Series No.: A87

RoHS compliant

竣豪電子股份有限公司 **Superior Tech Co., Ltd.**				General Tolerance	TITLE	RJ11 6P6C With Shell ,PBT料
				X. ± 0.5	DRAWN Jacky	DATE 10-27-22' / NO. T243
				.X ± 0.3		
				.XX ± 0.2	CHECK Tom	DATE 10-27-22' / PART NO. RJAB-6P6CSF5PBB-A87
REV. A	UNIT mm	SCALE 1:1		.XXX ± 0.1	APPROVED Tom	DATE 10-27-22' / CUSTOMER NO.
				角度 ± 5°		

(Q2-R03-01A) ST-R05-07