REV.	DESCRIPTION	DATE
A	New Drawing	2011/05/25

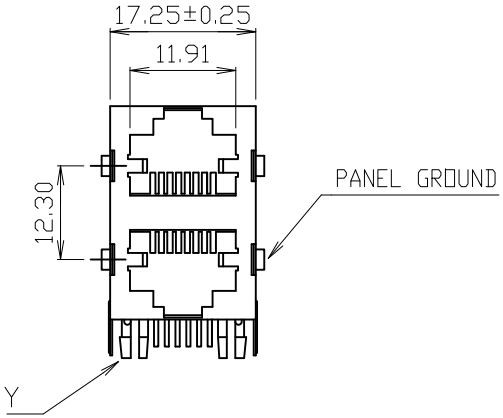

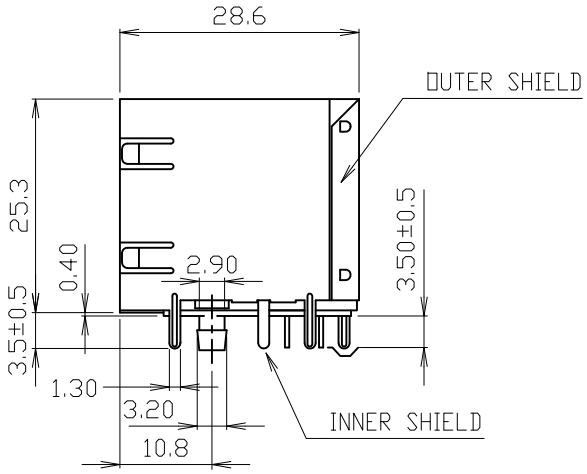

MATERIAL:
HOUSING-PBT POLYESTER UL-94V-0
MIXED GLASS FIBER.
STANDARD COLOR-BLACK
CONTACTS-0.35mm THICK PHOS-BRONZE
PLATED WITH 6u" HARD GOLD
ON SOLDER AREA.
SHIELD-0.20mm THICK COPPER ALLOY,
PLATED WITH NICKEL.
CAVITY CONFIRMS TO FCC RULES AND REGULATIONS
PART 68,SUBPART F.

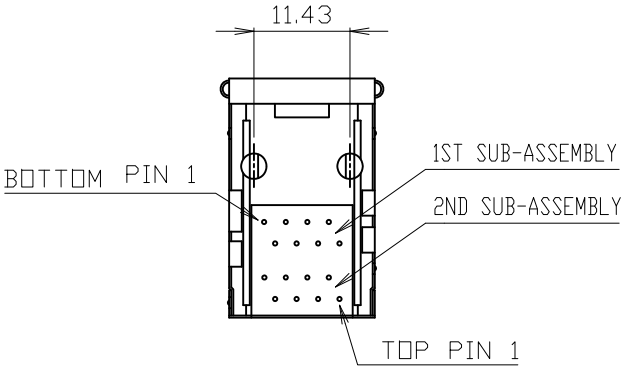

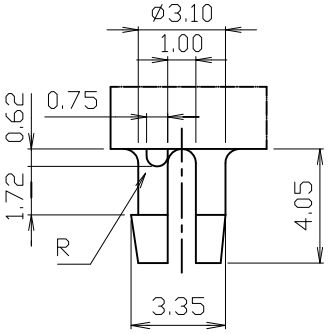

DETAIL Y

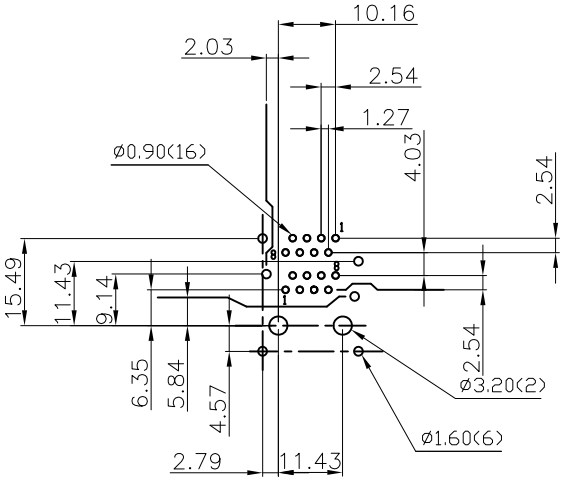

R	J	A	C	-	8	P	8	C	D	G	5	B	-	A

Number of Positions: 8P | 8 Positions

Number of Contact: 8C | 8 Contact

Port: D | Double

Contact Plating: G5 | 6u"

B | Tray

Series No.

PCB LAYOUT
Ref.

RoHS compliant

竣豪電子股份有限公司 **Superior Tech Co., Ltd.**			General Tolerance	TITLE	RJ 45 8P8C 雙層 +鐵殼	
			X. ± 0.5	DRAWN YuHongYu	DATE 05-25-11'	NO. T025
			.X ± 0.3	CHECK	DATE	PART NO. RJAC-8P8CDG5B-A
			.XX ± 0.2			
REV. A	UNIT mm	SCALE 1:1	.XXX ± 0.1	APPROVED	DATE	CUSTOMER NO.
			角度 ± 5°			

ST-R05-07